Custom Shower Drain

IDIER

INSTALLATION INSTRUCTIONS

Tools we will need:  Adjustable Wrench（Not Provided）

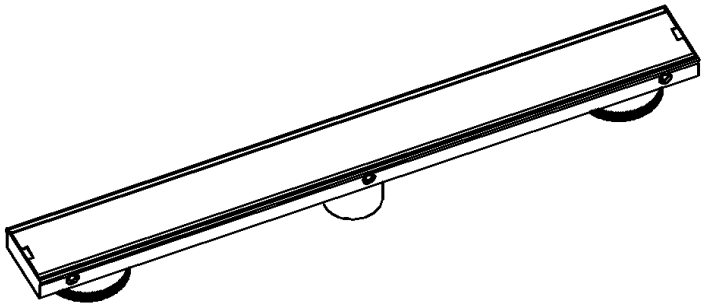

1

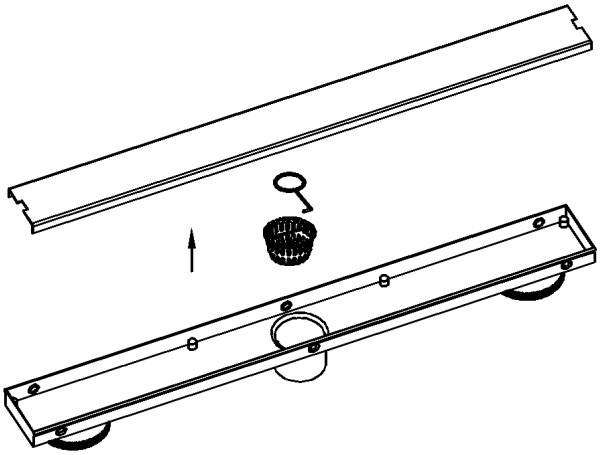

2

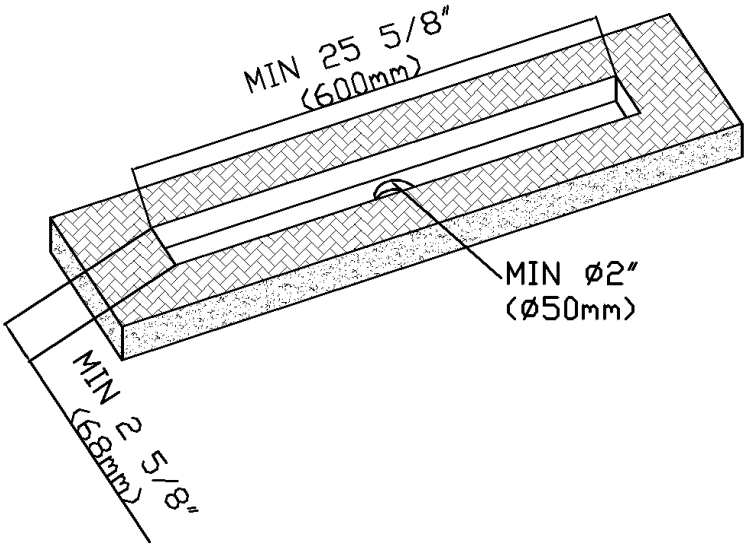

3 hole dimension

Adjust the fixed wheels on both sides to ensure they are parallel

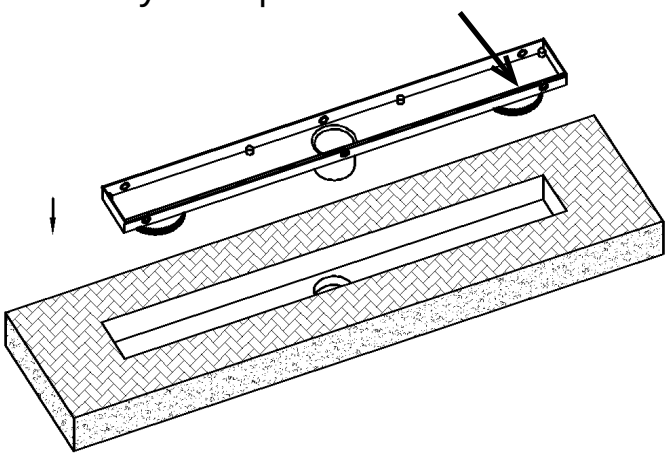

4

Drain should be aligned with the ground

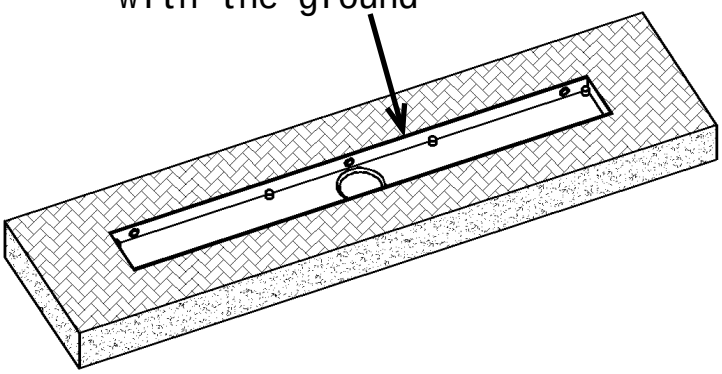

5

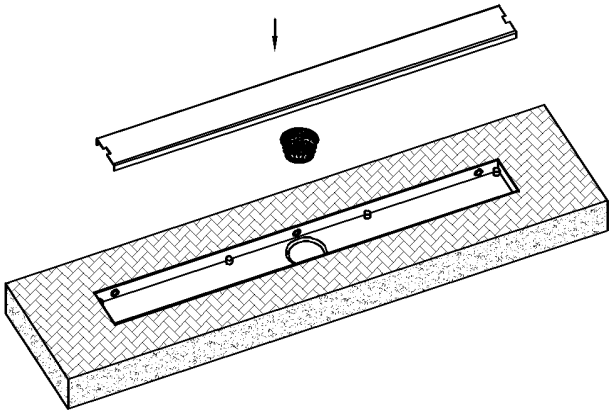

6