Custom Shower Drain

IDIER

INSTALLATION INSTRUCTIONS

Tools we will need:  Adjustable Wrench（Not Provided）

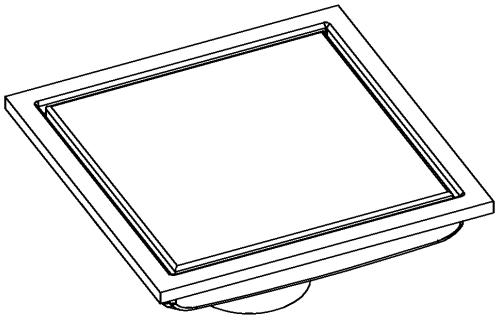

1

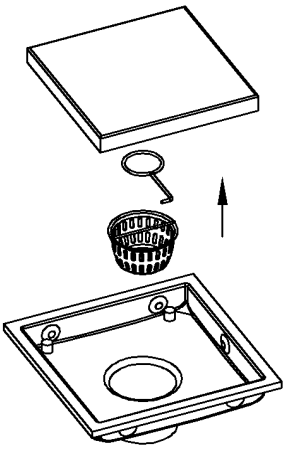

2

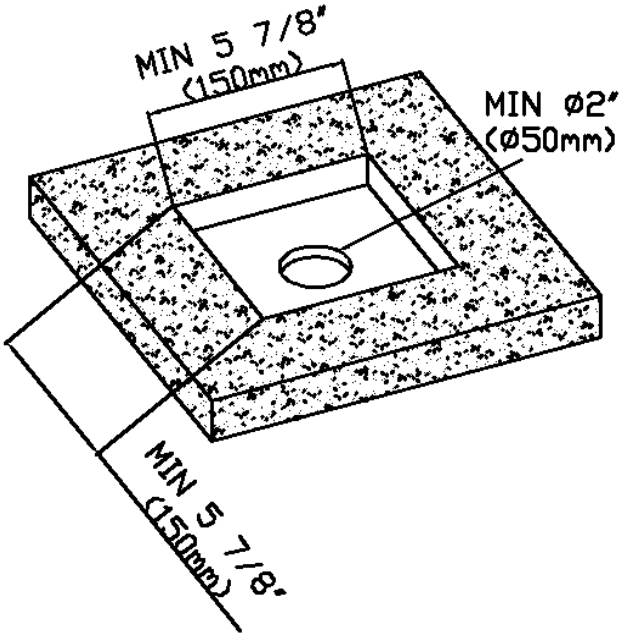

3 hole dimension

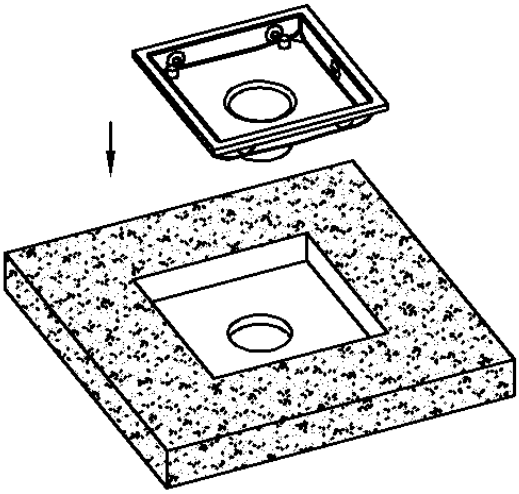

4

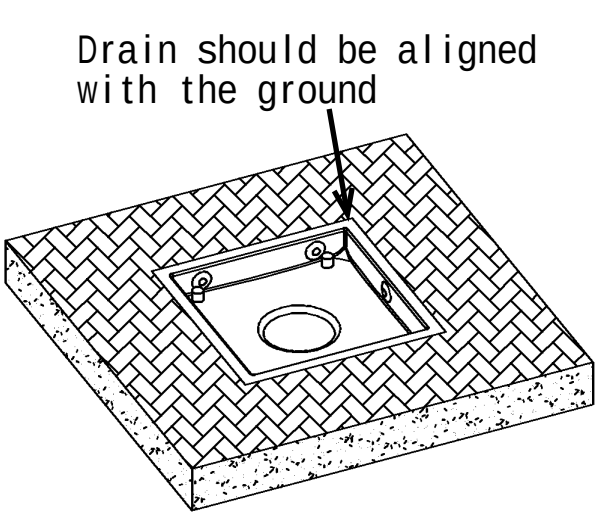

5

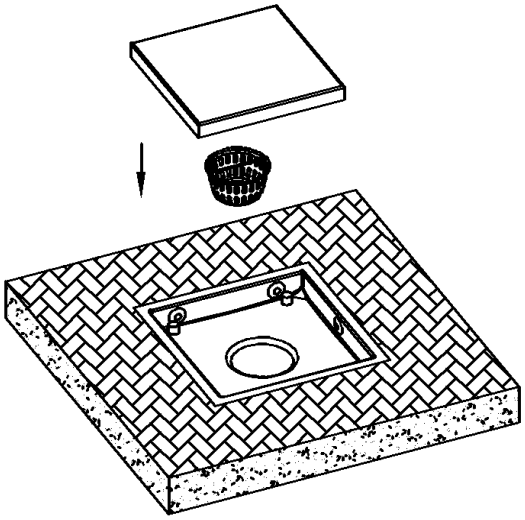

6