DESCRIPTION

- SUS304 construction
- Includes Red/Blue indicators

STANDARDS

- Third party certified to meet ASME A112.18.1 all applicable requirements referenced therein

Important

IMPORTANT

1.Please check that all components are present.
2.Before installation ensure that all feed lines are clear of debris and on/off valve is present.
3.Ensure water pressure is between 20-125 PSI (includes combination of hot and cold feed lines).
4.Pictures in the manual are general in content and may not represent exactly your purchased faucet. If you are having difficulties please contact a professional plumber.
5.If you will be away from home for an extended period you should shut off the main water supply.
6.Please insure that to make a wash for all water pipe before installation to insure no impurity inside.
7.When you need to welding the shower valve to the water pipe of the valve , please remember to take out the cartridge and any seal parts of the valve . When finish welding , need to wait for body of the valve cool down and then install the cartridge and the seal parts.
8.Need to used the 11-13N.m power to lock the cartridge.

All valve have the pass the the air testing and pressure testing before ship out. If request presssure testing before installation,Must under the guide of the professional Plumber with license. And air pressure do not over 125PSI. If you want to the Brust testing over 500PSI,you need to changed a new cartridge for normal using.

IDIER

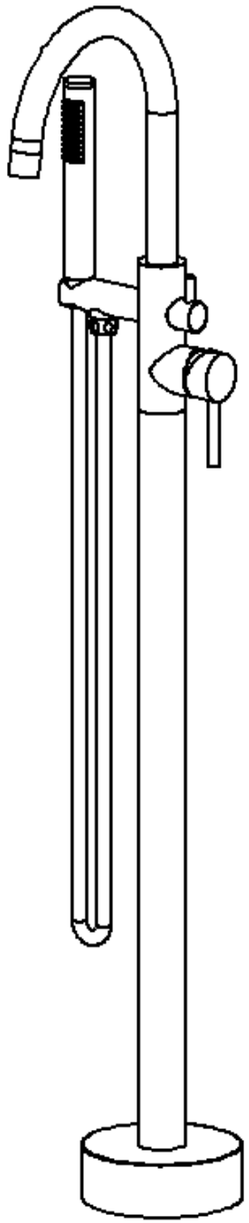

Technical drawing

RECOMMENDED TOOLS


Adjustable wrench


Pipe tape

Hexagon wrench

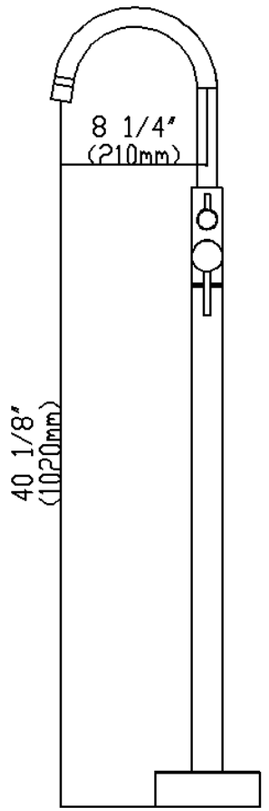



Before you begin

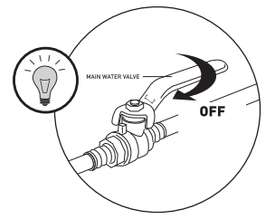

Note: Dimensions are for reference only.
Detailed information is in accordance with the final product.

Installation steps

1

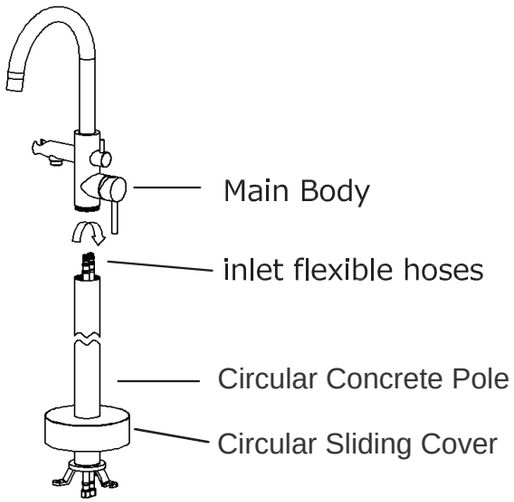

1.Insert the flexible hoses throw the square pole and assembling them to main body turning by hand.

2

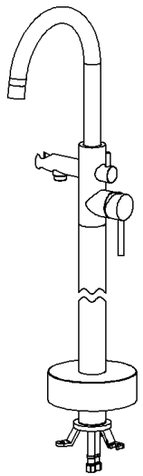

2.Match the square pole with the main body,fix together turning the 2 screws on rear with the key .

Installation steps

3

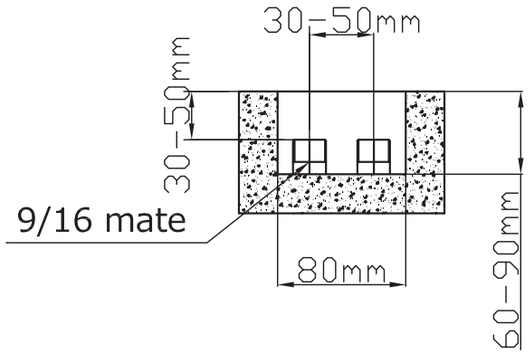

3.Create a chamber in the floor following the above measure with9/16 male connectors for water net.

4

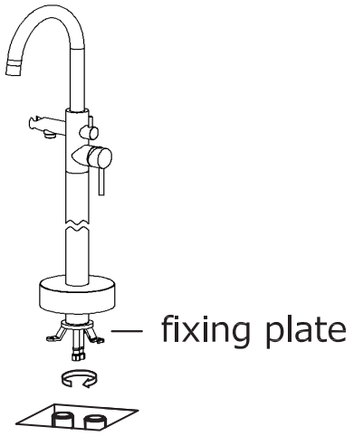

4.Insert the sliding cover on square pole, insert the flexible hose'snuts throw the fixing base and connect the G 1/2 nuts with the water net connectors fixing tight by key .

Installation steps

5

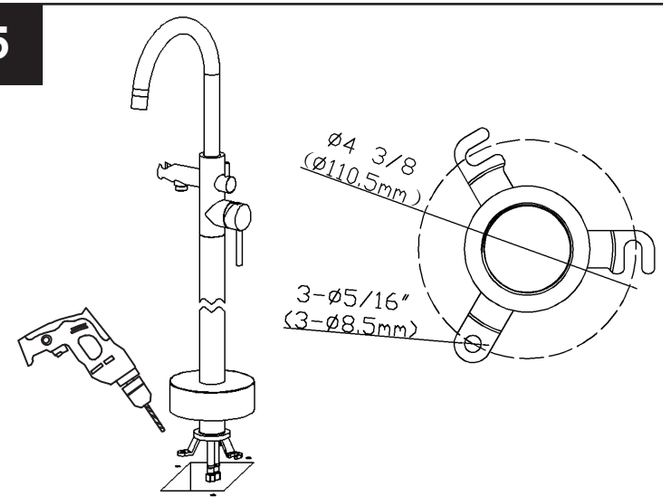

5.Adjust the complete to get correct position,then drill to fix baseplate.

6

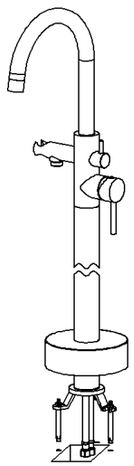

6.Insert the fixing bolts and fix tight in the floor.Move the coverto hide the base.