IDIER

# PULL-DOWN KITCHEN FAUCET

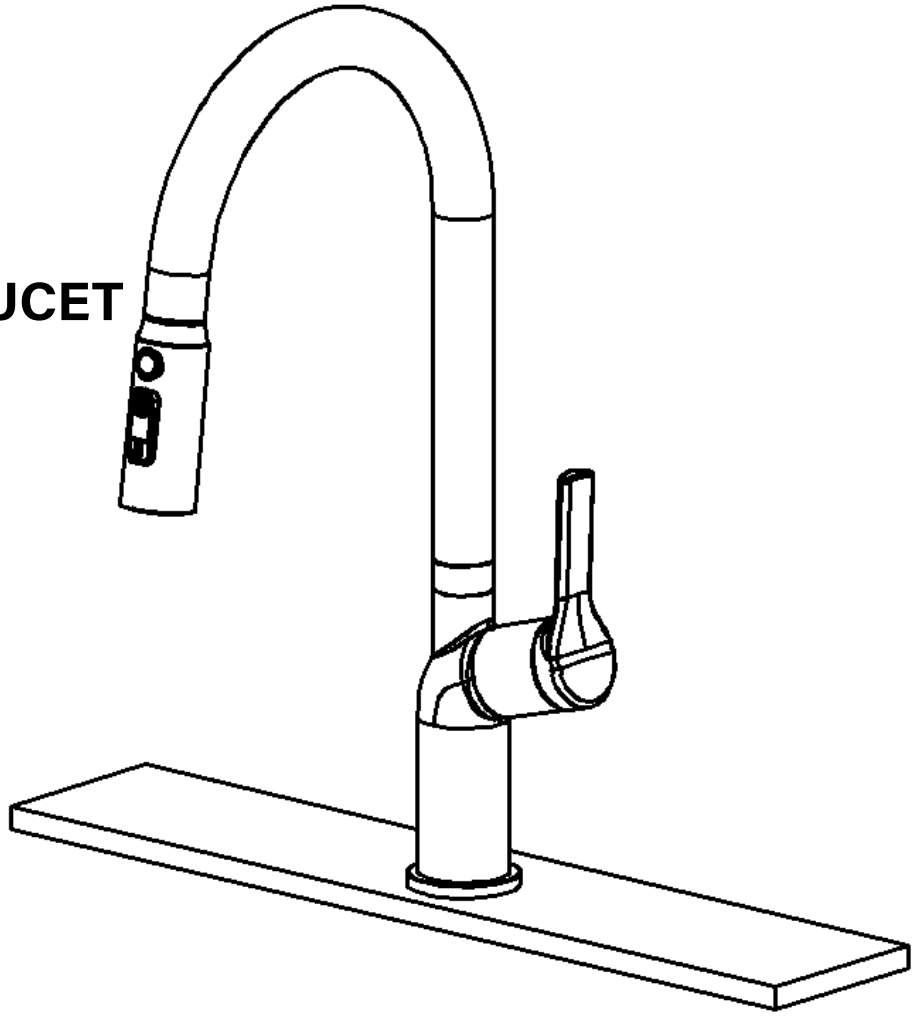

Questions , problems , missing parts , any dissatisfaction or doubt about our products , please be free to contact us , guaranteed 100% satisfaction

## INSTALLATION INSTRUCTIONS

### Notes before installation:

1.Please check that all components are present.
2.Before installation ensure that all feed lines are clear of debris and on/off valve is present.
3.Ensure water pressure is between 20-125 PSI(includes combination of hot and cold feed lines).
4.Pictures in the manual are general in content and may not represent exactly your purchased faucet. If you are having difficulties please contact a professional plumber.
5.If you will be away from home for an extended period you should shut off the main water supply.

### Daily maintenance:

1.Use a soft cloth and vinegar to remove hard-water spots.
2.Check aerator(if present) regularly for calcium build up When water stream is not optimum.
3.DO NOT use caustic cleaning products as the use will break down finish and will void the product warranty.
4.Acceptable cleaners include vinegar or mild non-abrasive liquid detergents.
5.If the water pressure appears to be less than optimum remove, inspect, clean or replace aerator.

## Tools we will need:

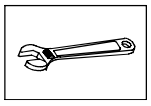

Adjustable Wrench

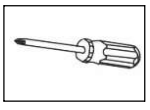

Philips Screwdriver

# HARDWARE CONTENTS (not shown actual size)

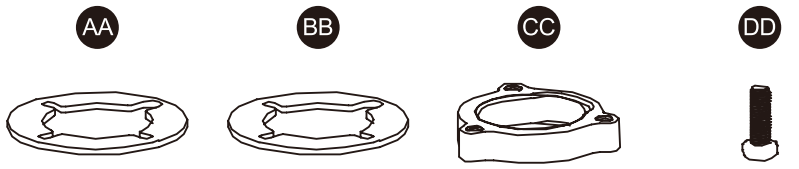


Rubber Washer x 1 | Metal Washer x 1 | Lock Nut x 1 | Hex Bolt x 2

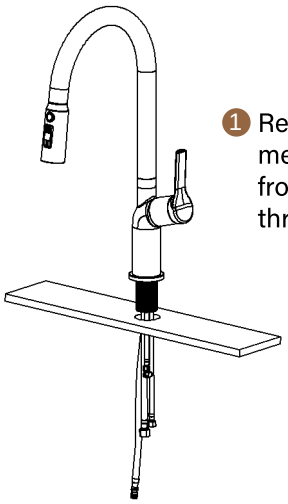

1 Remove the rubber washer, metal washer and locking nut from the faucet. Install faucet through center hole

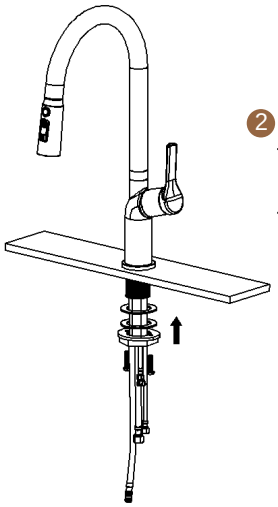

2 Re-install the rubber washer followed by the metal washer and lock-nut.Hand tighten then tighten further using a screw driver to tighten lock-nut screws

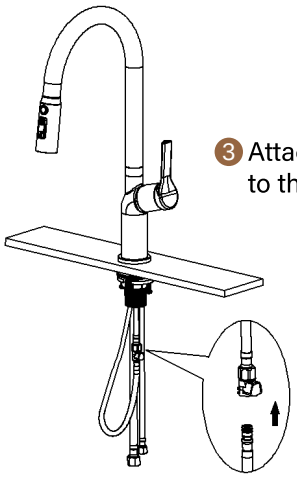

3 Attach the pull-down hose to the outlet tube

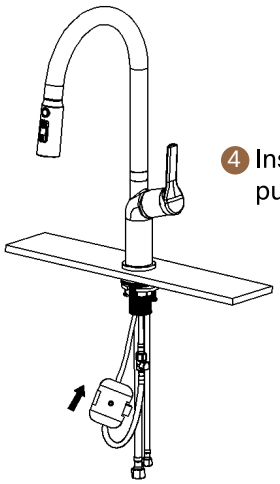

4 Install the weight ball to pull -down hose in place

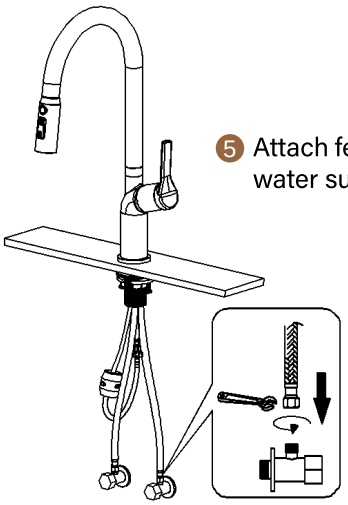

5 Attach fexible hose to water supply.

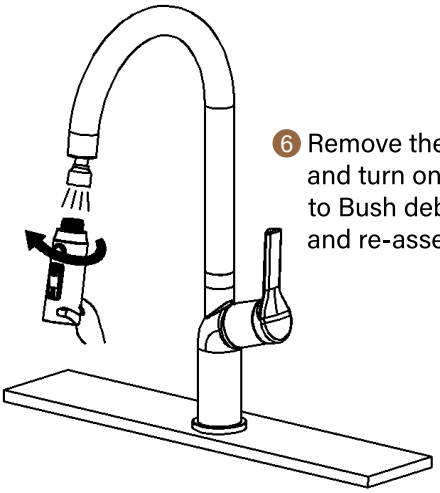

6 Remove the sprayer head and turn on faucet for 1-minute to Bush debris.Close the handle and re-assemble spray head.

**Note:** Pictures in the manual are general in content and may not represent exactly yourpurchased faucet. If you are having difficulties please contact a professional plumber.