IDIER Installation Guide

Tools you may need:

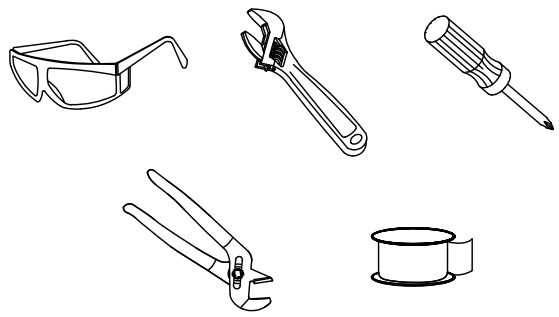

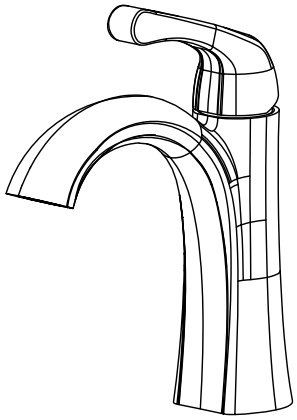

Save this instruction sheet for future reference

We reserve the right to update product installation instructions without notice.

Image is for reference only

SINGLE HANDLE
VESSEL BATHROOM FAUCET

Installation Steps

1

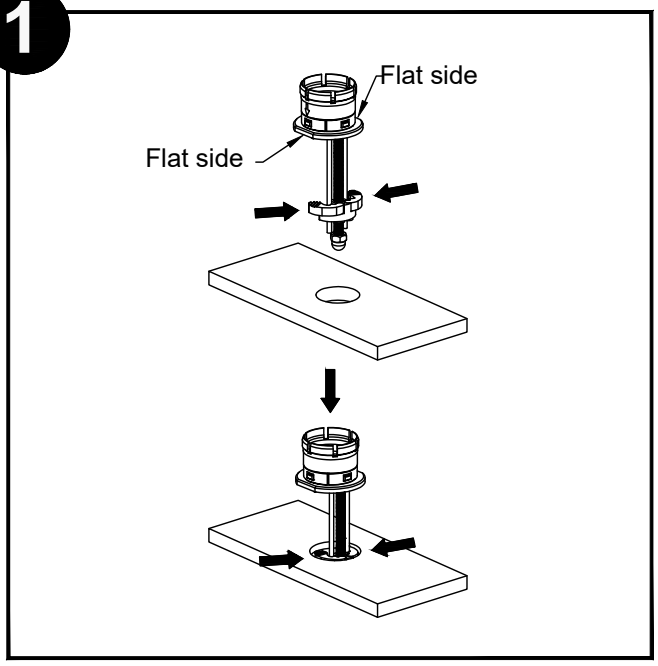

1. Squeeze the arms of the mounting hardware together and place the mounting hardware into the faucet hole. Make sure the flat edges of the mounting hardware face the front and back of the countertop.

2

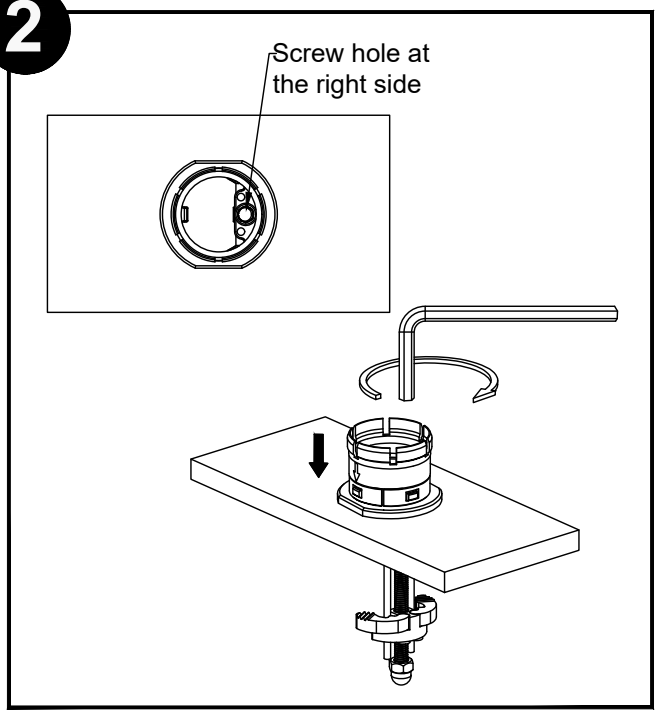

2. Tighten the mounting hardware with the hex wrench. Screw the hole on the right side of the mounting hardware.

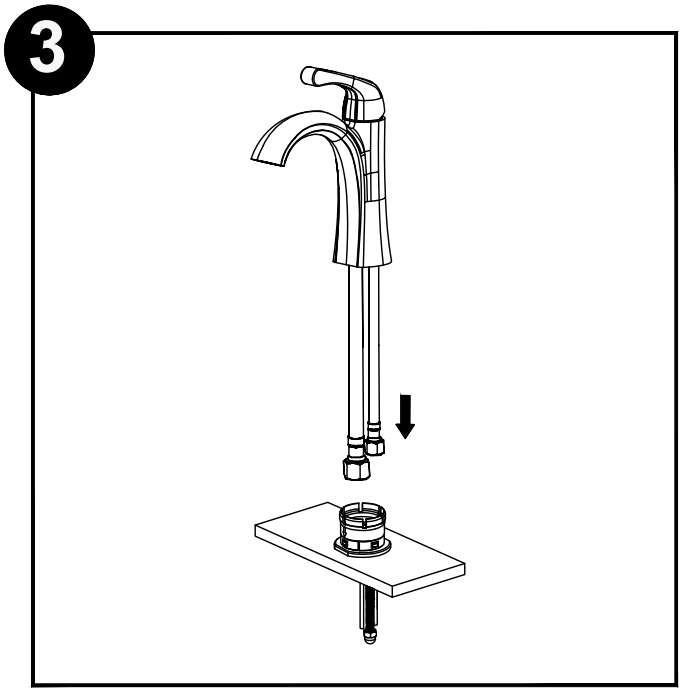

3. Place the faucet and waterlines through the mounting hardware.

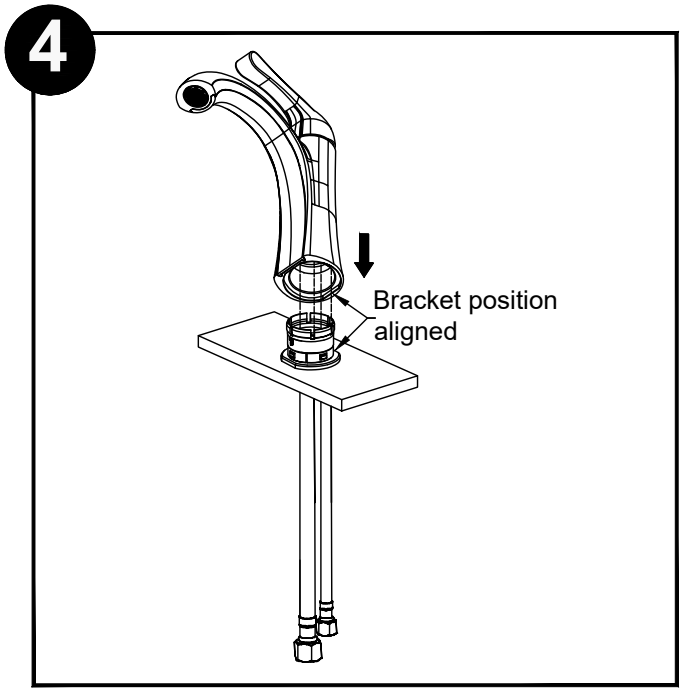

4. Make sure the bracket position is aligned.

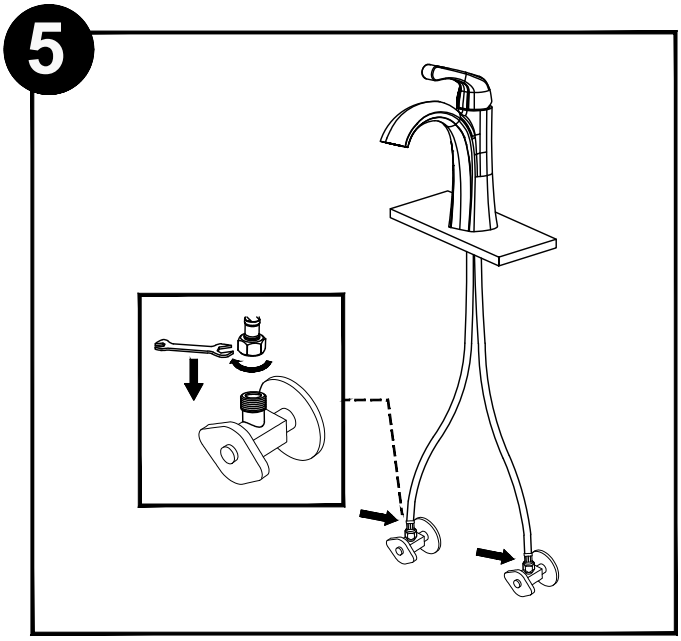

5. Flush the debris from the home's valves prior to installation of the water lines. Connect the waterlines to the water valves until snug. Turn on the water valves and check for leaks.