IDIER

SINGLE HOLE BATHROOM FAUCET INSTALLATION INSTRUCTIONS

Notes before installation:

1.Please check that all components are present.
2.Before installation ensure that all feed lines are clear of debris and on/off valve is present.
3.Ensure water pressure is between 20-125 PSI(includes combination of hot and cold feed lines).
4.Pictures in the manual are general in content and may not represent exactly your purchased faucet.If you are having difficulties please contact a professional plumber.
5.If you will be away from home for an extended period you should shut off the main water supply.

Daily maintenance:

1.Use a soft cloth and vinegar to remove hard-water spots.
2.Check aerator(if present) regularly for calcium build up when water stream is not optimum.
3.DO NOT use caustic cleaning products as the use will break down finish and will void the product warranty.
4.Acceptable cleaners include vinegar or mild non-abrasive liquid detergents.
5.If the water pressure appears to be less than optimum remove, inspect,clean or replace aerator.

Tools we will need:


Adjustable Wrench

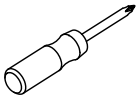
Phillips Screwdriver


Silicone Sealant


Safety Goggles

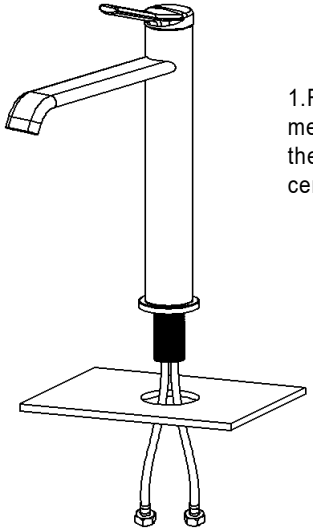

1.Remove the rubber washer, metal washer and locking nut from the faucet.Install faucet through center hole.

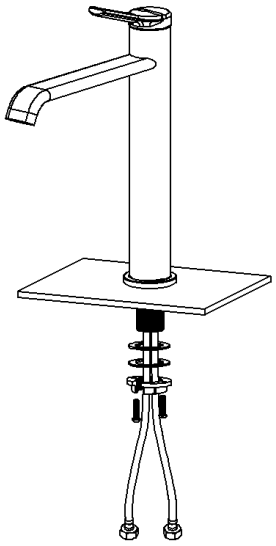

2.Re-install the rubber washer followed by the matal washer and lock-nut.Hand tighten then tighten further using a screw driverto tighten lock-nut screws.

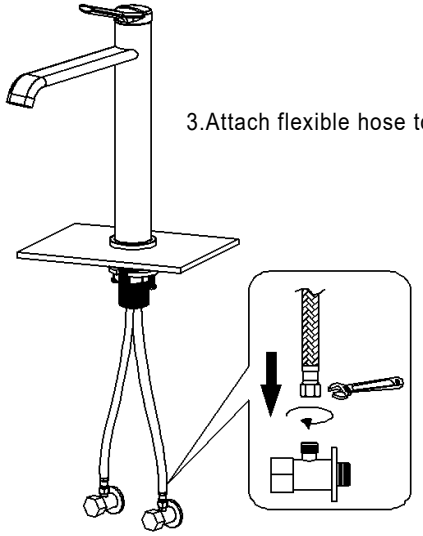

3.Attach flexible hose to water supply.

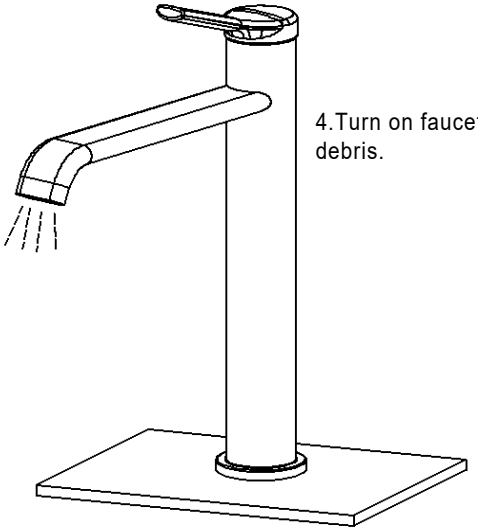

4.Turn on faucet for 1-minute to flush debris.

Note: Pictures in the manual are general in content and may not represent exactly your purchased faucet.If you are having difficulties please contact a professional plumber.