IDIER

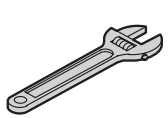





# Installation Guide

**1** Insert the faucet.

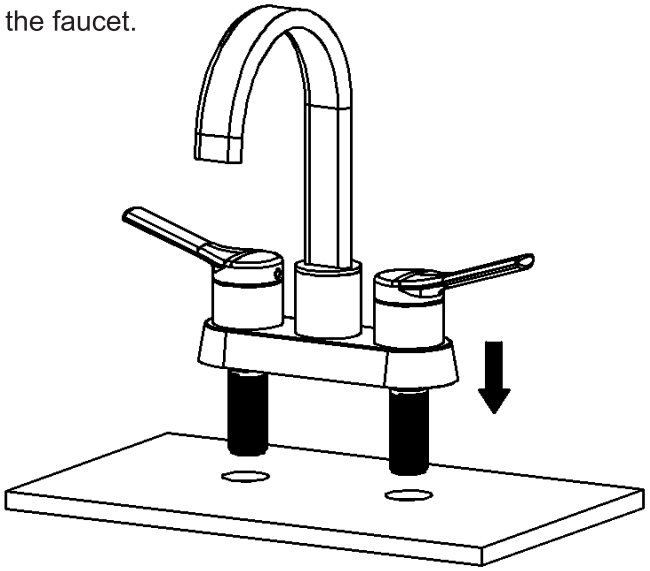

**2** Tighten the mounting nuts.

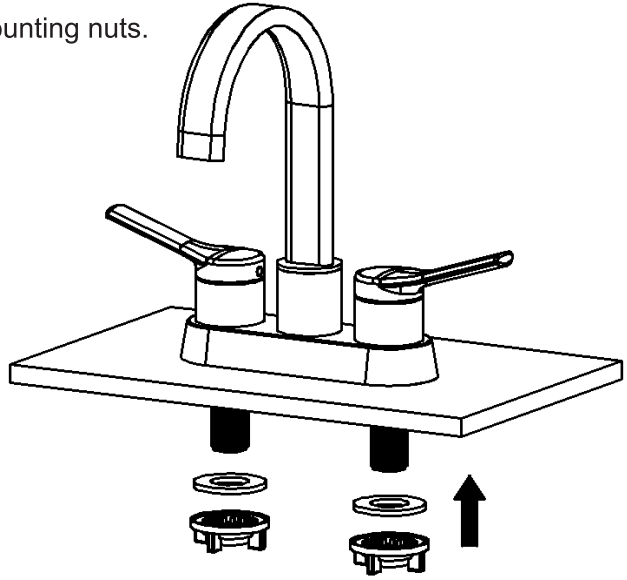

**3** Connect and tighten the supply hoses.

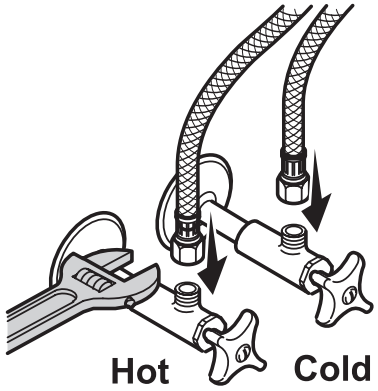


**4** Turn on the water supplies.Check all connections for leaks.

